Pronto 2

Side A

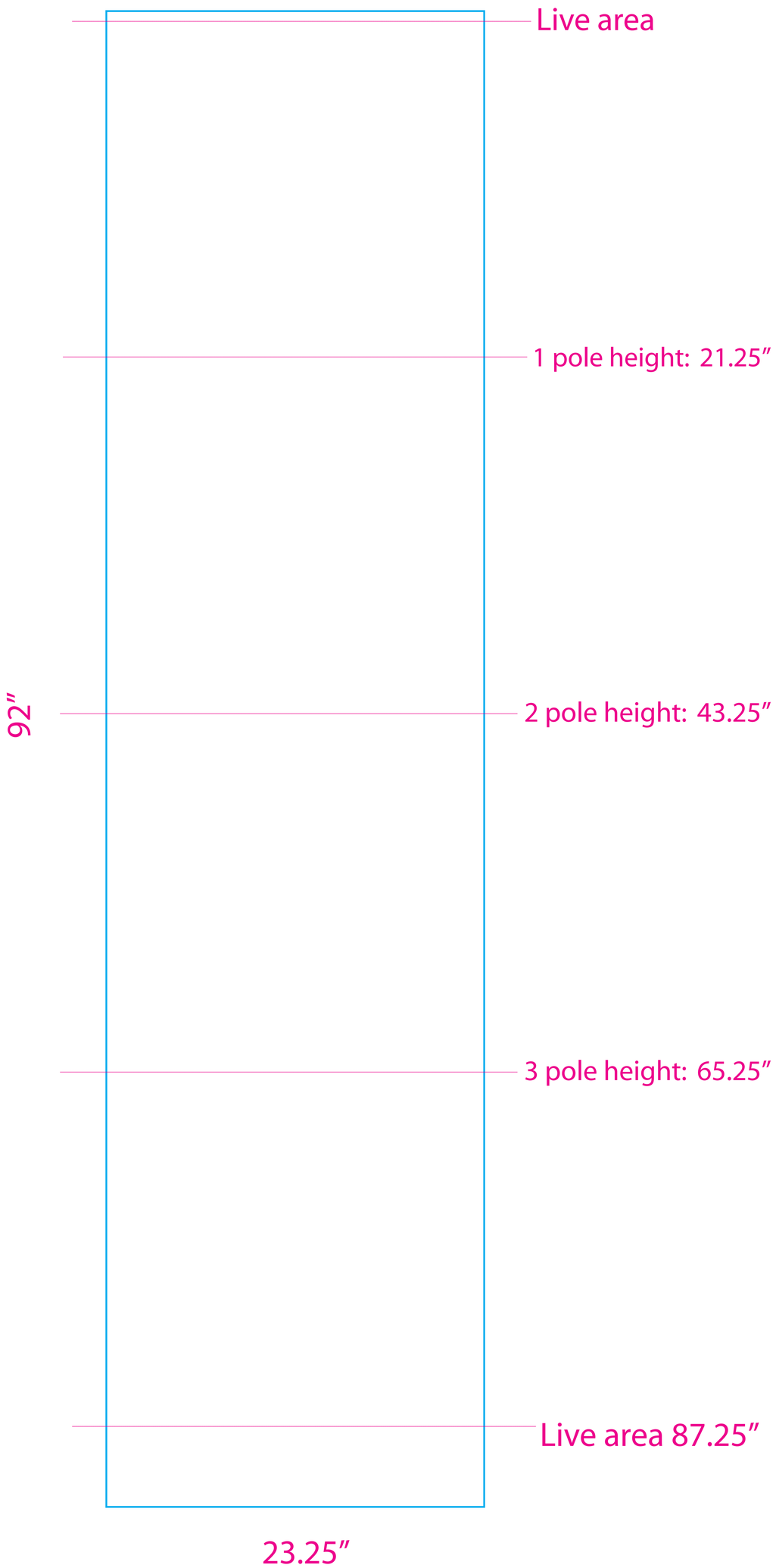

Side B

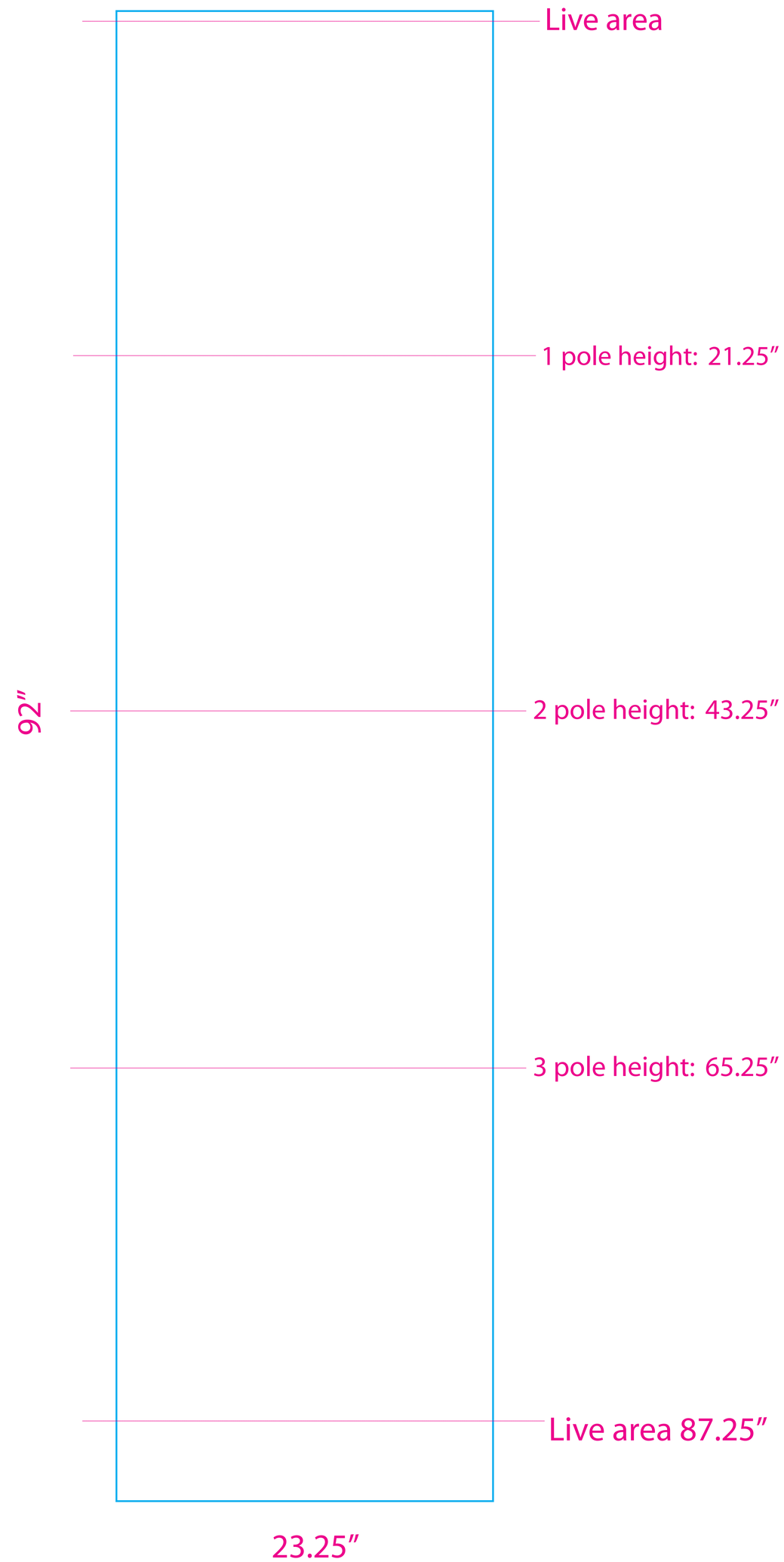

Final size: 23.25″w x 92″h

Live area: 87.25″ from the top

*KEEP ALL CRITICAL ARTWORK ELEMENTS 1″ ABOVE LIVE AREA

*Please note that .625″ will be
covered at the top by a hanger bar.

Pronto 2

Side A

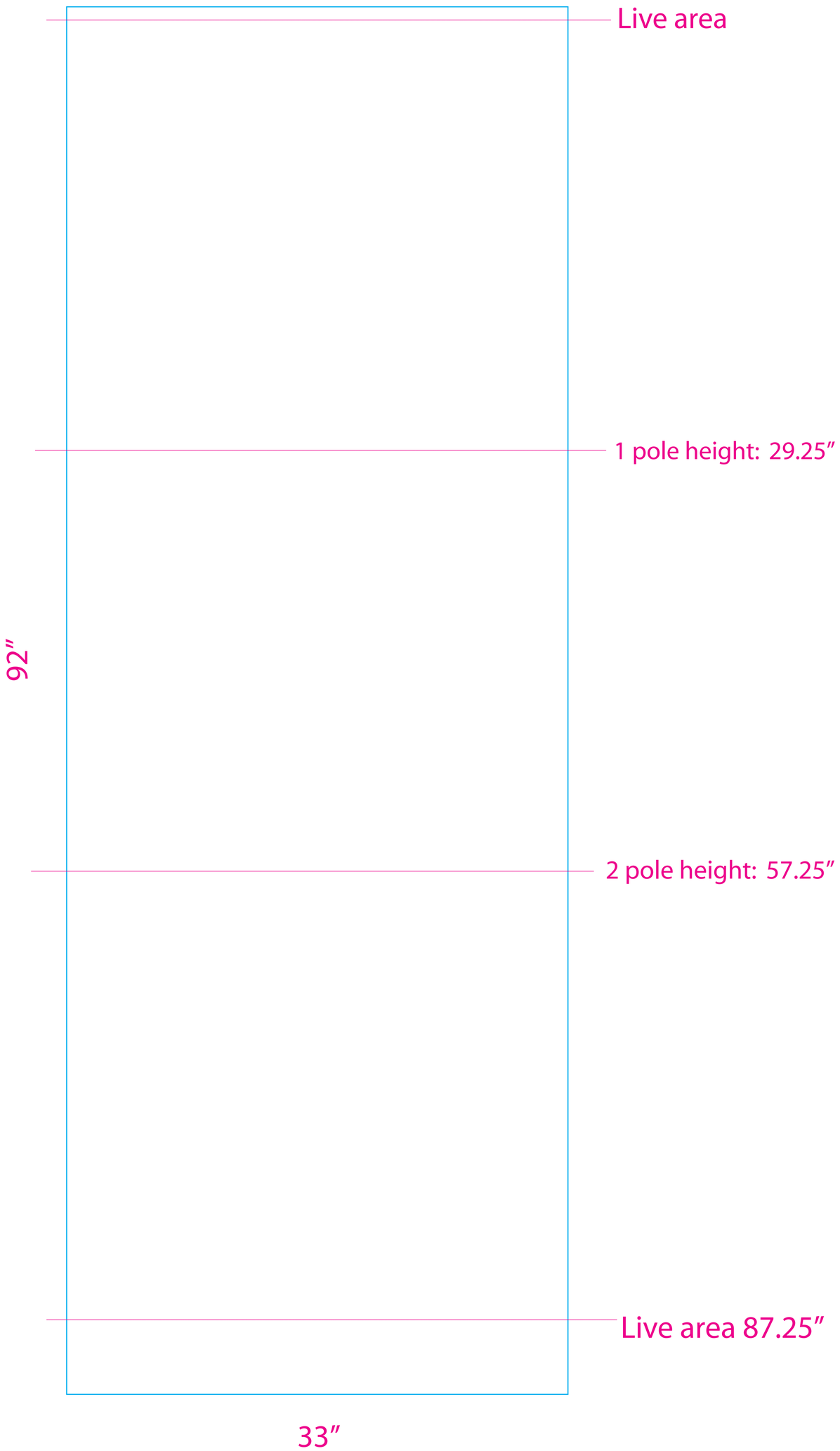

Side B

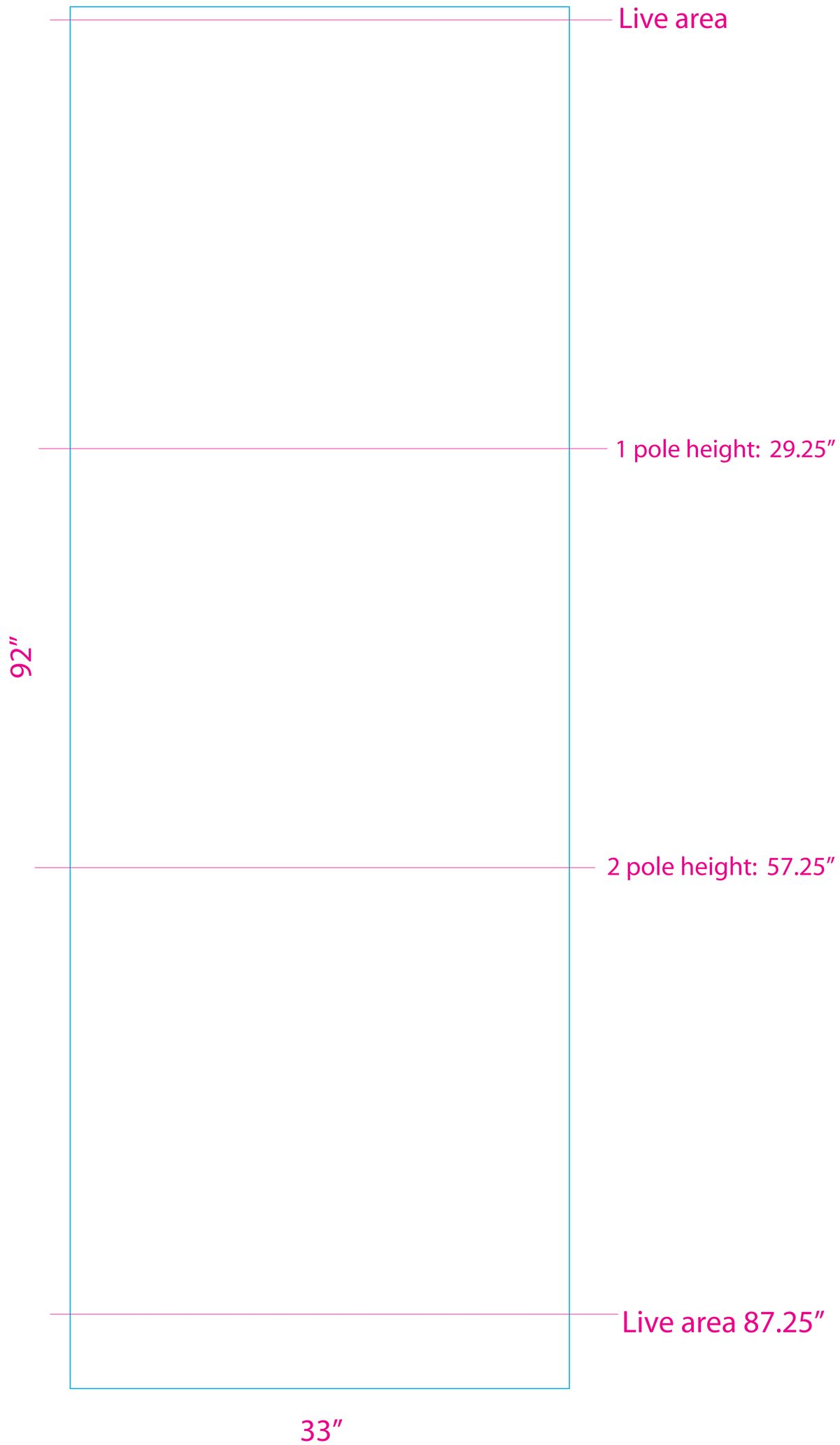

Final size: 33.25″w x 92″h

Live area: 87.25″ from the top

*KEEP ALL CRITICAL ARTWORK ELEMENTS 1″ ABOVE LIVE AREA

*Please note that .625″ will be
covered at the top by a hanger bar.

Pronto 2

Side A

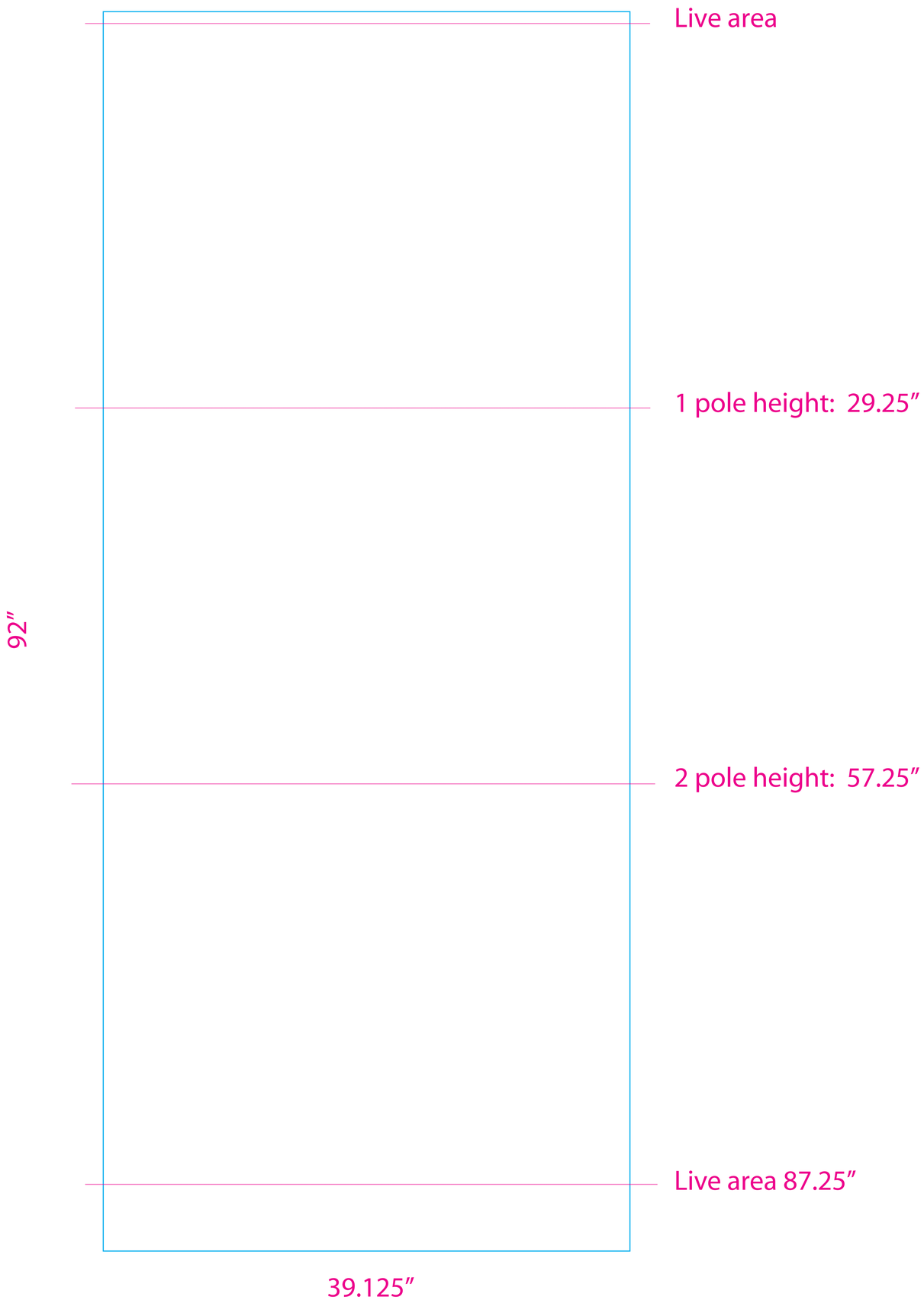

Side B

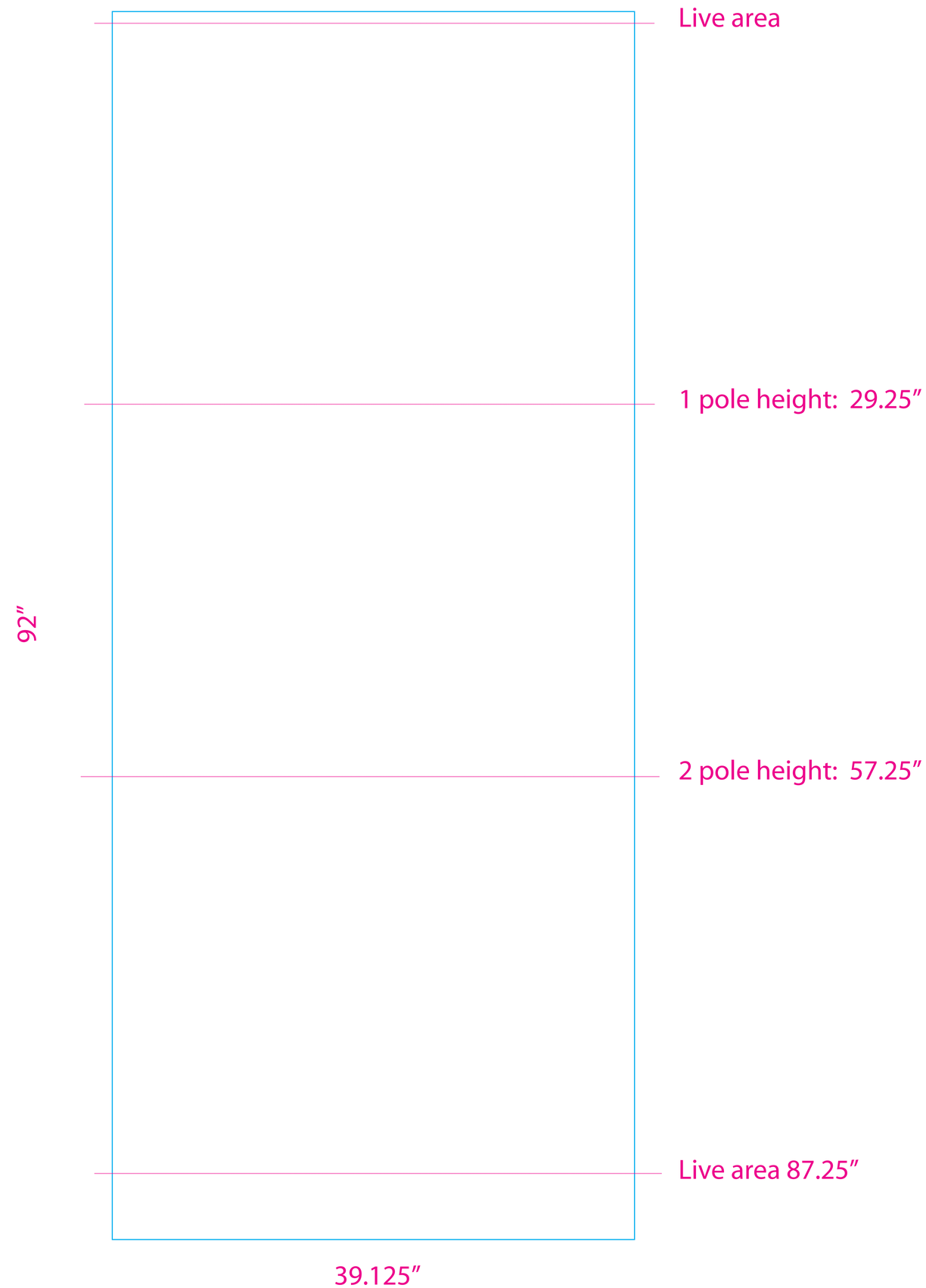

Final size: 39.125″w x 92″h
Live area: 87.25″ from the top
*KEEP ALL CRITICAL ARTWORK ELEMENTS 1″ ABOVE LIVE AREA
*Please note that .625″ will be
covered at the top by a hanger bar.

Pronto 2

Side A

Side B

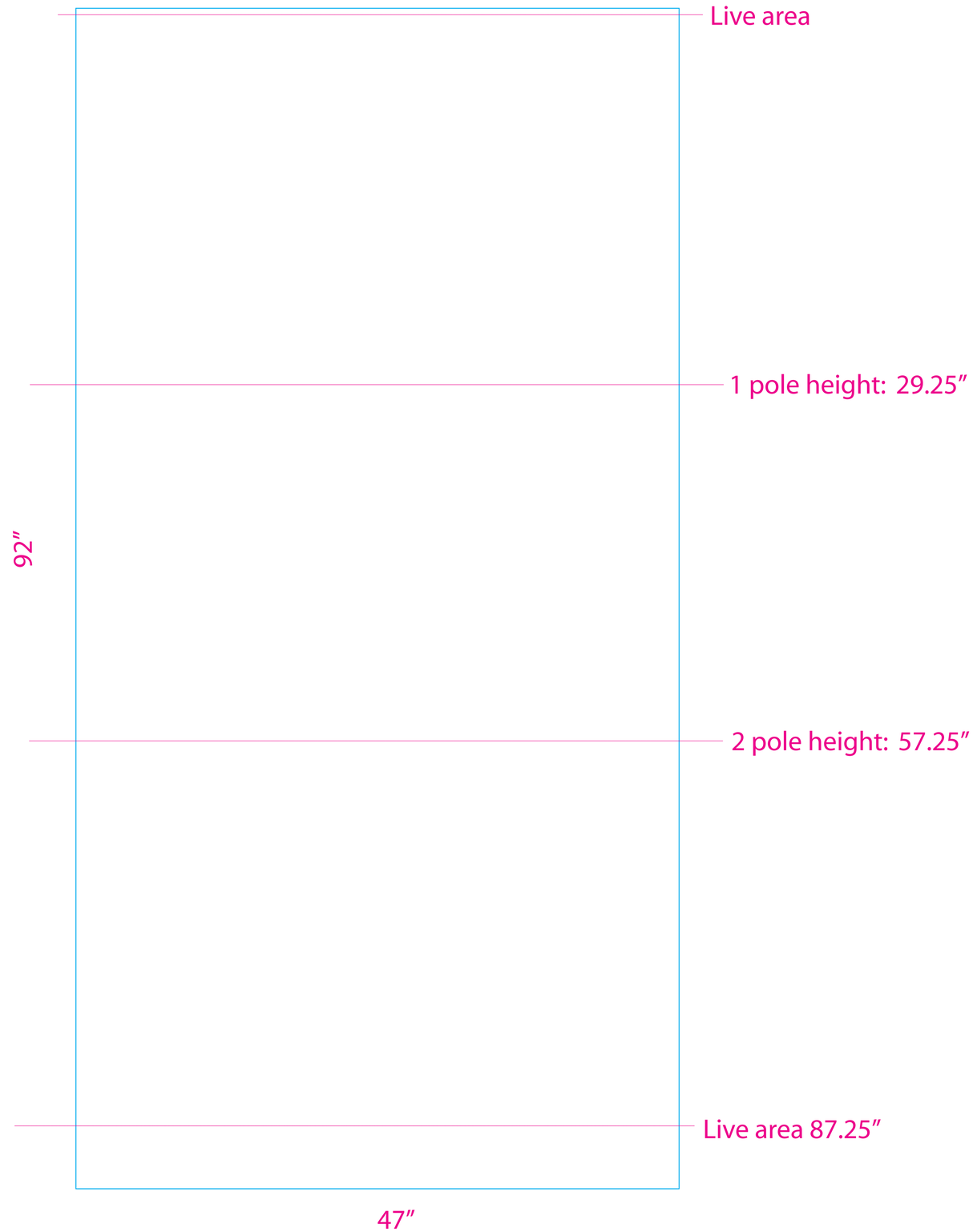

Final size: 47″w x 92″h
Live area: 87.25″ from the top
"KEEP ALL CRITICAL ARTWORK ELEMENTS 1″ ABOVE LIVE AREA*
*Please note that .625″ will be
covered at the top by a hanger bar.