Panoramic Frame

Component - Pano_Kit 10x20A - Wall

Graphic template 11/05/12

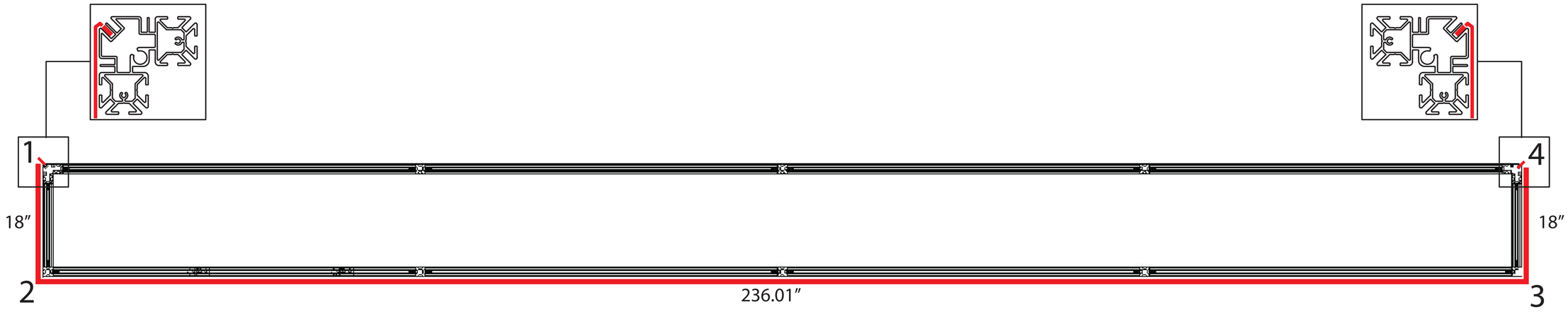

Graphic 1

Open/Live Area

272.01”w x 94.34”h

Print/Final

DESIGN TO THIS SIZE

273”w x 95.33”h

TEMPLATE IS AT 1/4 SCALE

start/stop point on frame
corner/wrap location
(NOTE - Cannot guarantee art placement will fall exact on corner locations - use these areas as a guide).

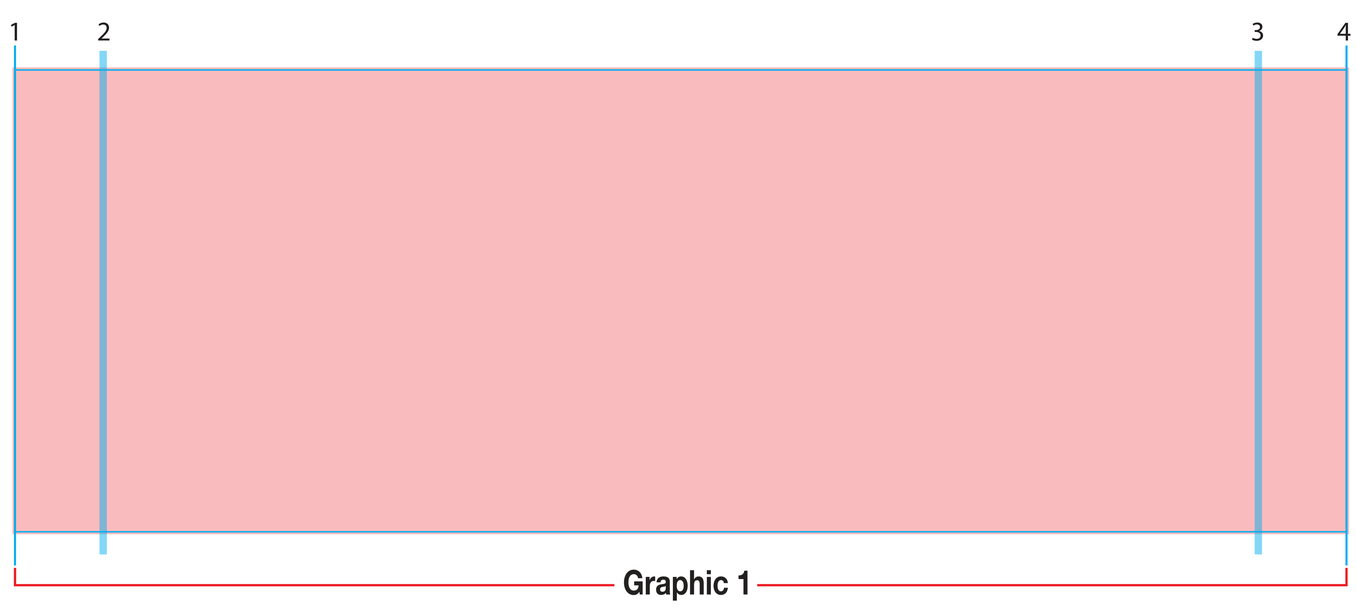

Panoramic Frame

Component - Pano_Kit 10x20A - Counter

Graphic template 11/05/12

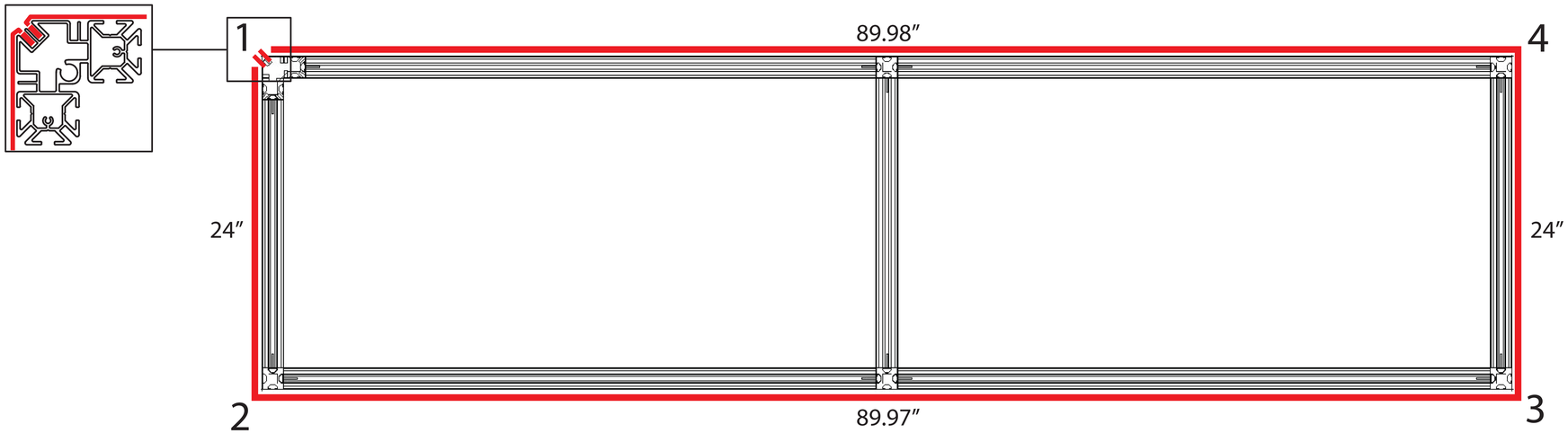

Graphic 1

Open/Live Area

227.94”w x 39.84”h

Print/Final

DESIGN TO THIS SIZE

228.93”w x 40.83”h

TEMPLATE IS AT 1/2 SCALE

start/stop point on frame
corner/wrap location
(NOTE - Cannot guarantee art placement will fall exact on corner locations - use these areas as a guide).

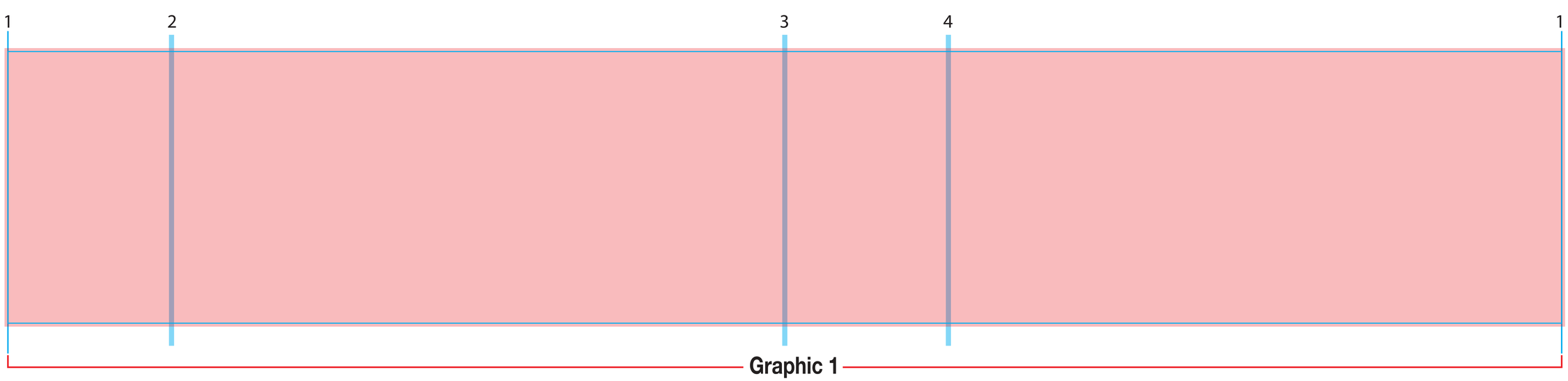

Panoramic Frame

Component - Pano_Kit 10x20A - Podium

Graphic template 11/05/12

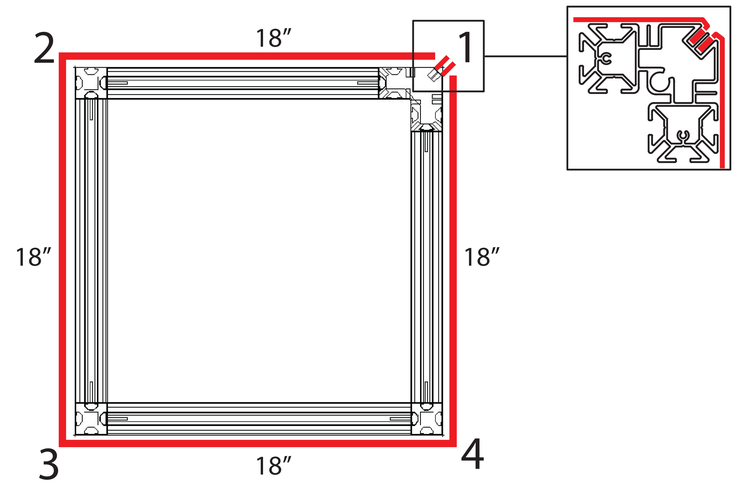

Graphic 1

Open/Live Area

72”w x 39.84”h

Print/Final

DESIGN TO THIS SIZE

72.99”w x 40.83”h

TEMPLATE IS AT 1/2 SCALE
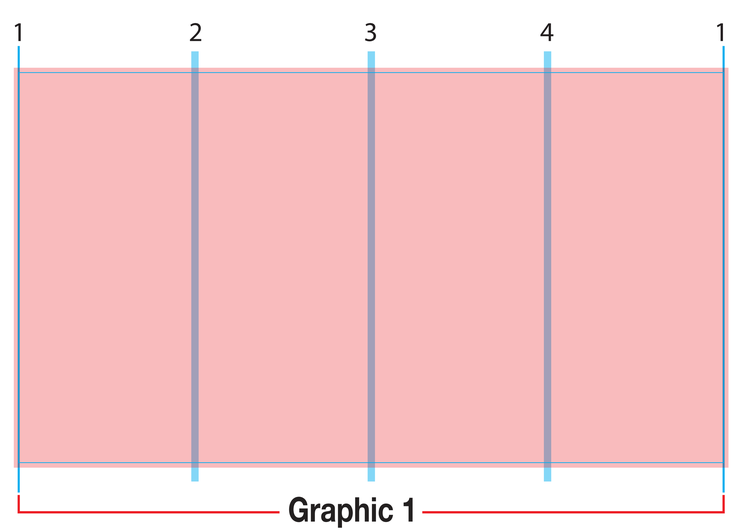
start/stop point on frame
corner/wrap location
(NOTE - Cannot guarantee art placement will fall exact on corner locations - use these areas as a guide).