8’ Full Table Throw

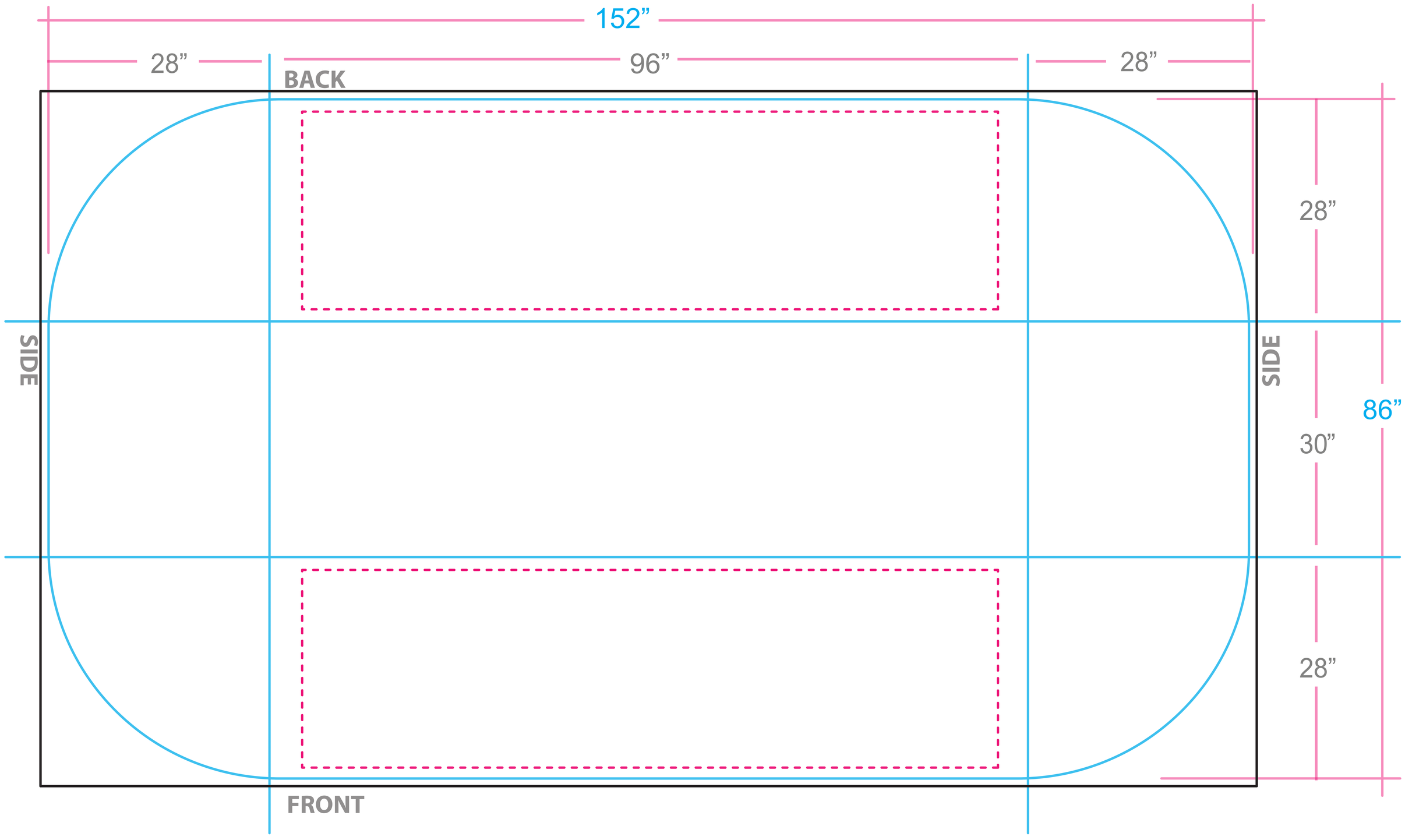

Print Size: 154”w x 88”h
Final Size: 152”w x 86”h
Logo Live Area: 88”w x 25”h (front and back)